正基科技股份有限公司

SPECIFICATION

PRODUCT NAME：AP72573

REVISION：0.1

DATE：Nov. 19th , 2026

Customer APPROVED	
Company	
Representative Signature	

PREPARED	REVIEW			APPROVED	DCC ISSUE
	PM	QA	ET		

正基科技股份有限公司

AMPAK Technology Inc.

AP72573

Data Sheet

Address:
6F.-2, No. 23, Huanke 1st Rd., Zhubei City, Hsinchu County 302047,
Taiwan
http://www.ampak.com.tw

Revision

Revision	Date	Description	Revised By
0.1	2026/11/19	Preliminary Release	Ian Zhuo

Contents

DCC ISSUE 0
Revision **1**
1. Introduction **3**
1.1 Overview 3
1.2 Product Features 4
2. General Specification **6**
2.1 General Specification 6
2.2 DC Characteristics 6
2.2.1 Absolute Maximum Ratings 6
2.2.2 Recommended Operating Rating 7
3. Wi-Fi RF Specification(TBD) **8**
3.1 2.4GHz RF Specification(TBD) 8
3.2 5GHz RF Specification(TBD) 10
3.3 6GHz RF Specification(TBD) 12
4. Bluetooth Specification(TBD) **14**
5. Pin Definition **15**
5.1 Pin Outline 15
5.2 Pin Assignment 16
6. Dimensions **21**
6.1 Module Physical Dimensions 21
6.2 Recommended footprint 21
7. External clock reference **22**
8. Host Interface (TBD) **23**
8.1 Reset and Regulator Control Signals Sequencing 23
8.2 Start-Up Sequences 23
8.3 Power-Down Sequence 23
8.4 SDIO V3.0 Interface Description 24
8.5 GPIOs Interface Description 24
8.6 I2C Interface Description 24
8.7 UART Interface Description 24
8.8 SPI Interface Description 24
8.9 PDM Interface Description 24
8.10 PWM Interface Description 24
8.11 ADC / DAC Interface Description 24
9. NPU Description (TBD) **25**
10. Boot Option (TBD) **26**
11. GPIO Alternative Signal Functions (TBD) **27**

12. Recommended Reflow Profile 28
13. Package Information (TBD) 29

1. Introduction

1.1 Overview

The AMPAK Technology® AP72573 is a WLAN (Wi-Fi7), BT (6.0), Thread and MCU combination chip with edge AI enabled. It is defined to support two modes of operation, independent master- and slave-mode. In slave mode, the host is the master which is responsible for AP72573 programming and to fulfill all the requirements for boot and guidance to control the operating modes and features. In master mode, AP72573 is independent and self-sufficient to boot and operate without any support from external host.

The Ampak AP72573 smart AIoT device includes an integrated general purpose MCU ARM M52 200-MHz Helium DSP with U55 uNPU 50 GOPS @ 200 MHz, 2.4/5/6 GHz IEEE802.11 a/b/g/n/ac/ax MAC/baseband/radio and Bluetooth® Low Energy (BLE) 6.0 and 802.15.4 Thread.

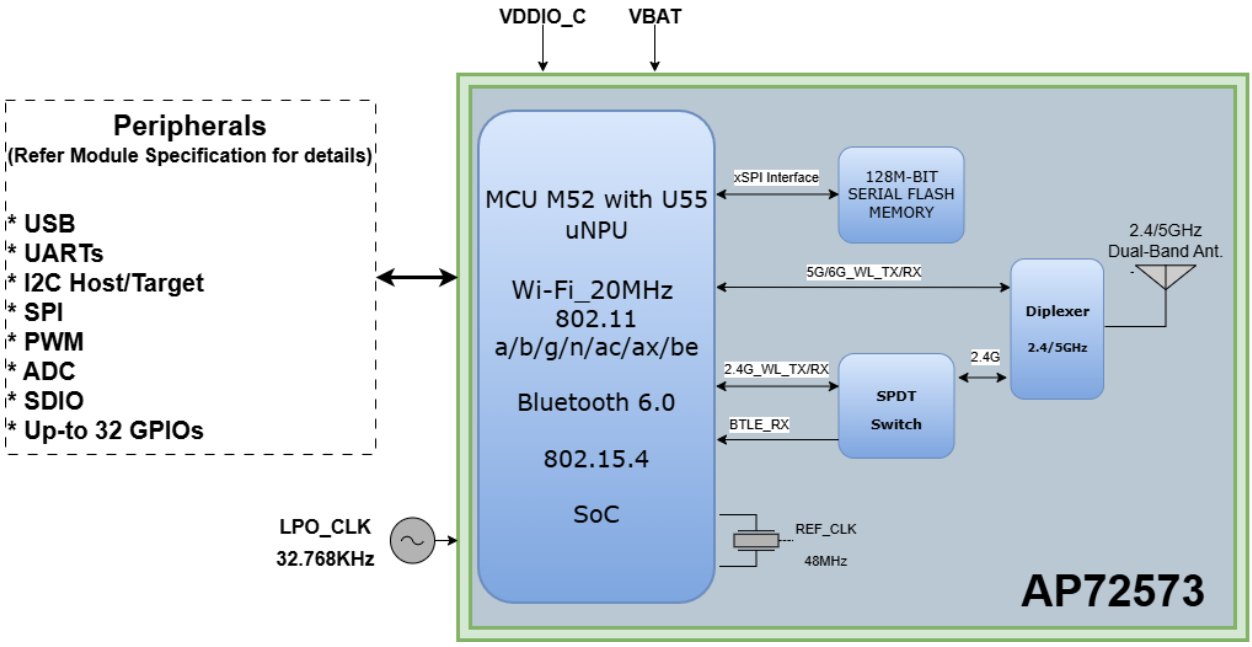

1.2 Product Features

MCU subsystem

- Arm MCU: Cortex-M52
- Arm NPU: Ethos-U55
- SSE-300–based subsystem interconnect
- Antifuse OTP: 32 Kb
- Frequency up to 200 MHz
- PSA Level 3 security
- Class B safety compliance
- Power modes to support sleep and low-voltage retention
- Independent ON/OFF of WLAN, BT and MCU

Memory

- MCU:
  - SRAM: 1 MB
  - Tightly Coupled Memory (TCM): ITCM 128 KB, DTCM 128 KB
- Serial Flash memory
  - 128M-bit / 16M-byte

Peripherals

- USB, UARTs, I2C Host/Target, SPI, PWM, ADC, SDIO
- Up-to 32 GPIOs (max.)

Security

- Fully firewalled secure CPU
- Secure boot with ECC digital signature verification
- On-module 32 Kb antifuse OTP
- True random number generator
- Hardware accelerators for AES, RSA, SHA, ECC and HASH
- Secure Island SynaPROT support
- PSA Certified™ Level 3 RoT component
- Secure access for Arm Cortex®-M52
- Anti-tamper protection
- Anti-rollback protection and certificate invalidation mechanisms
- Firmware encryption and AES-accelerated secure boot
- TZC/MPC/PPC-based memory isolation for WLAN/BT subsystems

IEEE 802.11 Key Features

- Wi-Fi 7 compliant. IEEE 802.11ax and 802.11be support
- Supports single spatial stream with PHY rate up to 114.7 Mbps.
- 20 MHz channels and up to 256-QAM support for 2.4 GHz, 5 GHz and 6 GHz bands.
- Lead Free design which is compliant with ROHS requirements.
- Supports a standard SDIO v3.0 (4-bit and 1-bit) host interface that is backward compatible with SDIO v2.0.
- Full compatibility with IEEE 802.11a/b/g/n/ac legacy protocols with enhanced performance.

Bluetooth Key Features

- BT Core Specification Version 6.0, including the following support:
  - LE power control
  - LE enhanced connection update
  - LE channel classification
- BT dedicated 2.4 GHz RF RX input port. Excellent sensitivity and low power are achieved for BT.
- Adaptive frequency hopping (AFH) to reduce radio frequency interference.
- Support for Bluetooth Channel Sounding.

IEEE 802.15.4/Thread Key Feature

- Support IEEE 802.15.4/Thread that can act as Border Router.

2. General Specification

2.1 General Specification

Model Name	AP72573
Product Description	1T1R 802.11 a/b/g/n/ac/ax/be Wi-Fi 7 + Bluetooth 6.0
Dimension	L x W : 23 x 35 (typical) mm，H : 1.1(max) mm
WiFi Interface	Supports a standard SDIO v3.0 (4-bit and 1-bit) host interface that is backward compatible with SDIO v2.0
Bluetooth Interface	Host Controller Interface (HCI) using a high-speed UART interface
Operating temperature	-30°C to 85°C (Note)
Storage temperature	-40°C to 105°C
Humidity	Operating Humidity 10% to 95% Non-Condensing Storage Humidity 5% to 95% Non-Condensing

Note: The optimal RF performance specified in the data sheet, however, is guaranteed only -10 °C to +55 °C and 3.3V < VBAT < 4.8V without derating performance.

2.2 DC Characteristics

2.2.1 Absolute Maximum Ratings

Symbol	Description	Min.	Max.	Unit
VBAT	Input supply Voltage	-0.5	5.0	V
VDDIO	Digital/Bluetooth/ I/O Voltage	-0.5	2.07	V

Extreme caution must be exercised to prevent electrostatic discharge (ESD) damage.

Symbol	Condition	ESD Rating	Unit
ESD_HAND_HBM	Human body model contact discharge per JEDEC EID/JESD22-A114	1.5	kV
ESD_HAND_CDM	Charged device model contact discharge per JEDEC EIA/JESD22-C101	250	V

2.2.2 Recommended Operating Rating

The module requires two power supplies: VBAT and VDDIO.

Voltage rails	Min.	Typ.	Max.	Unit
VBAT	3.3[Note1]	-	5.0[Note1]	V
VDDIO	1.62	1.8	1.98	V

Note1:

The module is functional across this range of voltages. Optimal RF performance specified in the data sheet, however, is guar-anteed only for 3.2V < VBAT < 4.8

The module requires two power supplies: other Digital I/O Pins.

For VDDIO=1.8V	Min.	Max.	Unit
VIH = Input high voltage	0.65 x VDDIO	NA	V
VIL = Input low voltage	NA	0.4 x VDDIO	V
VOH = Output high voltage @ 2mA	VDDIO – 0.4	NA	V
VOL = Output low voltage @ 2mA	NA	0.4	V

Programmable 2mA to 16mA drive strength. Default is 10mA.

3. Wi-Fi RF Specification(TBD)

3.1 2.4GHz RF Specification(TBD)

Conditions : VBAT=3.6V ; VDDIO=1.8V ; Temp=25°C

Feature	Description
WLAN Standard	IEEE 802.11 b/g/n/ax & Wi-Fi compliant
Frequency Range	2400 MHz ~ 2483.5 MHz (2.4GHz ISM Band)
Number of Channels	2400 MHz ~ 2483.5 MHz：Ch1 ~ Ch13
Modulation	802.11b : DQPSK、DBPSK、CCK 802.11g/n : OFDM /64-QAM、16-QAM、QPSK、BPSK 802.11ax : OFDMA /256-QAM、64-QAM、16-QAM、QPSK、BPSK

Output Power, tolerance ± 2 dB

The transmit EVM quality & spectrum mask are compliant with IEEE 802.11 standard

802.11b	1Mbps	2Mbps	5.5Mbps	11Mbps	
	19	19	19	19	
802.11g	6、9Mbps	12、18Mbps	24Mbps	36Mbps	48Mbps
	19	19	18	18	17
	54Mbps				
	17				
802.11n 20MHz	MCS0~2	MCS3	MCS4	MCS5	MCS6
	18.5	18.5	18	17	16
	MCS7				
	16				
802.11ax 20MHz	HE0~2	HE3	HE4	HE5	HE6
	18.5	18.5	18	17	16
	HE7	HE8	HE9		
	16	15.5	15		

Note: The specifications of RF output power are subject to change to fulfill the safety regulation and requirements in end-user product.

Sensitivity, tolerance ± 2 dB

CCK modulation PER ≦ 8%、OFDM modulation PER ≦ 10%

802.11b	Data Rate	Spec.(dBm)		
	1Mbps	-98		
	2Mbps	-94		
	5.5Mbps	-92		

	11Mbps	-88		
802.11g	**Data Rate**	**Spec.(dBm)**	**Data Rate**	**Spec.(dBm)**
	6Mbps	-90	**24Mbps**	-82
	9Mbps	-88	**36Mbps**	-79
	12Mbps	-86	**48Mbps**	-76
	18Mbps	-84	**54Mbps**	-74
802.11n 20MHz	**Data Rate**	**Spec.(dBm)**	**Data Rate**	**Spec.(dBm)**
	MCS0	-91	**MCS4**	-78
	MCS1	-88	**MCS5**	-76
	MCS2	-85	**MCS6**	-75
	MCS3	-81	**MCS7**	-73
802.11ax 20MHz	**Data Rate**	**Spec.(dBm)**	**Data Rate**	**Spec.(dBm)**
	HE0	-92	**HE6**	-76
	HE1	-89	**HE7**	-74
	HE2	-86	**HE8**	-72
	HE3	-82	**HE9**	-70.5
	HE4	-79		
	HE5	-77		
Maximum Input Level	802.11b: -10 dBm			
	802.11g/n/ax: -20 dBm			

3.2 5GHz RF Specification(TBD)

Conditions : VBAT=3.6V ; VDDIO=1.8V ; Temp=25°C

Feature	Description
WLAN Standard	IEEE 802.11a/n/ac/ax & Wi-Fi compliant
Frequency Range	5150~5350MHz、5470~5725MHz、5745~5850MHz (5GHz UNII Band)
Number of Channels	5150~5350MHz：Ch36 ~ Ch64 5470~5725MHz：Ch100 ~ Ch144 5745~5850MHz：Ch149 ~ Ch165
Modulation	802.11a : OFDM /64-QAM、16-QAM、QPSK、BPSK 802.11n : OFDM /64-QAM、16-QAM、QPSK、BPSK 802.11ac : OFDM /256-QAM、64-QAM、16-QAM、QPSK、BPSK 802.11ax : OFDMA /1024-QAM、256-QAM、64-QAM、16-QAM、QPSK、BPSK

Output Power, tolerance ± 2 dB

The transmit EVM quality & spectrum mask are compliant with IEEE 802.11 standard

802.11a	**Frequency (MHz)**	**6~9Mbps**	**12~18Mbps**	**24Mbps**	**36Mbps**
	5150~5350	15	15	15	15
	5470~5725	15.5	15.5	15.5	15.5
	5745~5850	15.5	15.5	15.5	15.5
	Frequency (MHz)	**48Mbps**	**54Mbps**		
	5150~5350	15	14.5		
	5470~5725	15.5	15		
	5745~5850	15.5	15		
802.11n 20MHz	**Frequency (MHz)**	**MCS0~2**	**MCS3**	**MCS4**	**MCS5**
	5150~5350	14.5	15	15	15
	5470~5725	15.5	15.5	15.5	15.5
	5745~5850	15.5	15.5	15.5	15.5
	Frequency (MHz)	**MCS6**	**MCS7**		
	5150~5350	14.5	13.5		
	5470~5725	15	14		
	5745~5850	15	14		

802.11ac 20MHz	Frequency (MHz)	MCS0~2	MCS3	MCS4	MCS5
	5150~5350	14.5	15	15	15
	5470~5725	15.5	15.5	15.5	15.5
	5745~5850	15.5	15.5	15.5	15.5
	Frequency (MHz)	MCS6	MCS7	MCS8	
	5150~5350	14.5	13.5	12	
	5470~5725	15	14	12.5	
	5745~5850	15	14	12.5	
802.11ax 20MHz	Frequency (MHz)	HE0~2	HE3	HE4	HE5
	5150~5350	14.5	15	15	15
	5470~5725	15.5	15.5	15.5	15.5
	5745~5850	15.5	15.5	15.5	15.5
	Frequency (MHz)	HE6	HE7	HE8	HE9
	5150~5350	14.5	13.5	12	11
	5470~5725	15	14	12.5	11.5
	5745~5850	15	14	12.5	11.5

Note: The specifications of RF output power are subject to change to fulfill the safety regulation and requirements in end-user product.

Sensitivity, tolerance ± 2 dB

CCK modulation PER ≦ 8%、OFDM modulation PER ≦ 10%

802.11a	Data Rate	Spec.(dBm)	Data Rate	Spec.(dBm)
	6Mbps	-90	24Mbps	-83
	9Mbps	-89	36Mbps	-79
	12Mbps	-88	48Mbps	-74
	18Mbps	-86	54Mbps	-73
802.11n 20MHz	Data Rate	Spec.(dBm)	Data Rate	Spec.(dBm)
	MCS0	-90	MCS4	-79
	MCS1	-88	MCS5	-75
	MCS2	-86	MCS6	-72
	MCS3	-83	MCS7	-71
802.11ac 20MHz	Data Rate	Spec.(dBm)	Data Rate	Spec.(dBm)
	MCS0	-90	MCS5	-75
	MCS1	-88	MCS6	-72

	MCS2	-86	**MCS7**	-71
	MCS3	-83	**MCS8**	-67
	MCS4	-79		
802.11ax 20MHz	**Data Rate**	**Spec.(dBm)**	**Data Rate**	**Spec.(dBm)**
	HE0	-90	**HE6**	-72
	HE1	-88	**HE7**	-71
	HE2	-86	**HE8**	-67
	HE3	-83	**HE9**	-64
	HE4	-79		
	HE5	-75		
Maximum Input Level	802.11a/n/ac/ax: -30 dBm			

3.3 6GHz RF Specification(TBD)

Conditions : VBAT=3.3V ; VDDIO=1.8V ; Temp=25°C

Feature	**Description**
WLAN Standard	IEEE 802.11ax & Wi-Fi compliant
Frequency Range	5925~7125MHz (6GHz U-NII5, U-NII6, U-NII-7, U-NII-8 Band)
Number of Channels	5925~6425MHz：6G1 ~ 6G93 6425~6525MHz：6G97 ~ 6G113 6525~6875MHz：6G117~6G181 6875~7125MHz：6G185~6G233
Modulation	802.11ax : OFDMA /1024-QAM、256-QAM、64-QAM、16-QAM、QPSK、BPSK
Output Power , tolerance ± 2.5 dB **The transmit EVM quality & spectrum mask are compliant with IEEE 802.11 standard**	

802.11ax 20MHz	**Frequency (MHz)**	**HE0~2**	**HE3**	**HE4**	**HE5**
	5925~6425	14	14	14	14
	6425~6525	13.5	13.5	13.5	13.5
	6535~6675	13.5	13.5	13.5	13.5
	6695~7125	12	12	12	12
	Frequency (MHz)	**HE6**	**HE7**	**HE8**	**HE9**
	5925~6425	13.5	12.5	11	10.5
	6425~6525	13.5	12.5	11	10.5
	6535~6675	13.5	12.5	11	10.5
	6695~7125	11.5	10.5	8.5	7.5

Note: The specifications of RF output power are subject to change to fulfill the safety regulation and requirements in end-user product.

Sensitivity, tolerance ± 2 dB, OFDM modulation PER ≦ 10%

802.11ax 20MHz	**Frequency (MHz)**	**Data Rate**	**Spec.(dBm)**	**Data Rate**	**Spec.(dBm)**
	5925~6425	**HE0**	-89	**HE5**	-74
		HE1	-86	**HE6**	-71
		HE2	-84	**HE7**	-68
		HE3	-83	**HE8**	-66
		HE4	-77	**HE9**	-63
	Frequency (MHz)	**Data Rate**	**Spec.(dBm)**	**Data Rate**	**Spec.(dBm)**
	6425~6525	**HE0**	-89	**HE5**	-74
		HE1	-86	**HE6**	-71
		HE2	-84	**HE7**	-68
		HE3	-83	**HE8**	-66
		HE4	-77	**HE9**	-63
	Frequency (MHz)	**Data Rate**	**Spec.(dBm)**	**Data Rate**	**Spec.(dBm)**
	6525~6875	**HE0**	-89	**HE5**	-74
		HE1	-86	**HE6**	-71
		HE2	-84	**HE7**	-68
		HE3	-83	**HE8**	-66
		HE4	-77	**HE9**	-63
	Frequency (MHz)	**Data Rate**	**Spec.(dBm)**	**Data Rate**	**Spec.(dBm)**
	6875~7125	**HE0**	-86	**HE5**	-70
		HE1	-82	**HE6**	-67
		HE2	-80	**HE7**	-64
		HE3	-79	**HE8**	-62
		HE4	-73	**HE9**	-59

4. Bluetooth Specification(TBD)

Conditions : VBAT=3.3V ; VDDIO=1.8V ; Temp=25°C

Feature	Description
General Specification	
Bluetooth Standard	BDR、EDR(1Mbps & 2Mbps)、LE(1Mbps)、2LE(2Mbps) LELR(125Kbps) 、LELR(500Kbps)
Host Interface	UART
Frequency Band	2402 MHz ~ 2480 MHz
Number of Channels	79 channels for classic 、40 channels for BLE
Modulation	GFSK, π/4-DQPSK, 8DPSK
RF Specification	
Output Power, tolerance ± 2.5 dB	
	CL1 (dBm)
BDR Output Power	7
EDR Output Power	6
BLE Output Power	7
Sensitivity, tolerance ± 2.5 dB	
Sensitivity @ BER=0.1% for GFSK (1Mbps)	-87 dBm
Sensitivity @ BER=0.01% for π/4-DQPSK (2Mbps)	-89 dBm
Sensitivity @ BER=0.01%for 8DPSK (3Mbps)	-84 dBm
Sensitivity @ PER=30.8% for LE (1Mbps)	-90 dBm
Sensitivity @ PER=30.8% for 2LE (2Mbps)	-90 dBm
Sensitivity @ PER=30.8% for LELR (125Kbps)	-100 dBm
Sensitivity @ PER=30.8% for LELR (500Kbps)	-95 dBm
Maximum Input Level	GFSK (1Mbps):-20dBm
	π/4-DQPSK (2Mbps) :-20dBm
	8DPSK (3Mbps) :-20dBm

Note*：The Bluetooth BDR output power is able to be configured by firmware (hcd file).

5. Pin Definition

5.1 Pin Outline



5.2 Pin Assignment

NO	Name	Type	Description
1	MCU_GPIO10_XSPI_CS1	I/O	GPIOs, For details, please refer to the GPIO Alternative Signal Functions.
2	USB_VBUS (5V_IN)	P	USB 2.0 VBUS power input (+5V)
3	GND	P	Ground connections
4	USB_DP	I/O	USB 2.0 Data Positive
5	USB_DN	I/O	USB 2.0 Data Minus
6	GND	P	Ground connections
7	GND	P	Ground connections
8	GND	P	Ground connections
9	GND	P	Ground connections
10	VBAT	P	DC supply for VBAT Refer to the 2.2.2 Recommended Operating Rating for details.
11	VBAT	P	DC supply for VBAT Refer to the 2.2.2 Recommended Operating Rating for details.
12	GND	P	Ground connections
13	GND	P	Ground connections
14	GND	P	Ground connections
15	CHIP_PAD_REG_ON	I	Power Up (high)/ Shutdown (Low) the module. Power enabled active high and disable active low Refer to the 8. Host Interface for details.
16	MCU_GPIO28	I/O	GPIOs, For details, please refer to the GPIO Alternative Signal Functions.
17	MCU_GPIO24	I/O	GPIOs, For details, please refer to the GPIO Alternative Signal Functions.
18	MCU_GPIO22	I/O	GPIOs, For details, please refer to the GPIO Alternative Signal Functions.
19	GND	P	Ground connections
20	MCU_GPIO15	I/O	GPIOs, For details, please refer to the GPIO Alternative Signal Functions.
21	MCU_GPIO17	I/O	GPIOs, For details, please refer to the GPIO Alternative Signal Functions.
22	MCU_GPIO19	I/O	GPIOs, For details, please refer to the

			GPIO Alternative Signal Functions.
23	GND	P	Ground connections
24	GPADC_IN1	I	Analog input channel of the General-Purpose ADC. please refer to the GPIO Alternative Signal Functions.
25	GPADC_IN2	I	Analog input channel of the General-Purpose ADC. please refer to the GPIO Alternative Signal Functions.
26	GPADC_IN5	I	Analog input channel of the General-Purpose ADC. please refer to the GPIO Alternative Signal Functions.
27	GPADC_IN7	I	Analog input channel of the General-Purpose ADC. please refer to the GPIO Alternative Signal Functions.
28	GP_DAC_OUT	O	General-Purpose Digital-to-Analog Converter output.
29	GND	P	Ground connections
30	GND	P	Ground connections
31	GND	P	Ground connections
32	GND	P	Ground connections
33	GND	P	Ground connections
34	GND	P	Ground connections
35	GND	P	Ground connections
36	GND	P	Ground connections
37	GND	P	Ground connections
38	GND	P	Ground connections
39	GND	P	Ground connections
40	GND	P	Ground connections
41	GND	P	Ground connections
42	GND	P	Ground connections
43	GND	P	Ground connections
44	GND	P	Ground connections
45	GND	P	Ground connections
46	RF_SW_CTRL_1	I/O	GPIOs : MCU_GPIO_27, For details, please refer to the GPIO Alternative Signal Functions.
47	RF_SW_CTRL_3	I/O	GPIOs : MCU_GPIO_27, For details, please refer to the GPIO Alternative Signal Functions.
48	MCU_GPIO21/ STRAP0 (PLL BYPASS)	I/O	GPIOs, For details, please refer to the GPIO Alternative Signal Functions. Refer to the Boot Option settings for details.
49	MCU_GPIO13	I/O	GPIOs, For details, please refer to the GPIO Alternative Signal Functions.
50	GND	P	Ground connections

51	LPO_IN	I	External 32.768 kHz Low-Power Oscillator Input
52	GND	P	Ground connections
53	MCU_GPIO5	I/O	GPIOs, For details, please refer to the GPIO Alternative Signal Functions.
54	MCU_GPIO7	I/O	GPIOs, For details, please refer to the GPIO Alternative Signal Functions.
55	MCU_GPIO_12	I/O	GPIOs, For details, please refer to the GPIO Alternative Signal Functions.
56	GND	P	Ground connections
57	VDDIO_C	P	DC supply voltage for digital I/O Refer to the 2.2.2 Recommended Operating Rating for details.
58	GND	P	Ground connections
59	MCU_GPIO3/STRAP8 (DAP SEL)	I/O	GPIOs, For details, please refer to the GPIO Alternative Signal Functions. Refer to the Boot Option settings for details.
60	MCU_GPIO4/STRAP9(DAP SEL)	I/O	GPIOs, For details, please refer to the GPIO Alternative Signal Functions. Refer to the Boot Option settings for details.
61	USB_USB0ID	—	This pin is reserved. (Floating)
62	GND	P	Ground connections
63	GND	P	Ground connections
64	GND	P	Ground connections
65	GND	P	Ground connections
66	GND	P	Ground connections
67	VBAT	P	DC supply for VBAT Refer to the 2.2.2 Recommended Operating Rating for details.
68	GND	P	Ground connections
69	MCU_GPIO29	I/O	GPIOs, For details, please refer to the GPIO Alternative Signal Functions.
70	MCU_ATE_MODE_RESETN	I	This pin is reserved. An external 10 kΩ pull-up resistor is required.
71	MCU_GPIO25	I/O	GPIOs, For details, please refer to the GPIO Alternative Signal Functions.
72	MCU_GPIO23	I/O	GPIOs, For details, please refer to the GPIO Alternative Signal Functions.
73	MCU_GPIO14	I/O	GPIOs, For details, please refer to the

			GPIO Alternative Signal Functions.
74	MCU_GPIO16	I/O	GPIOs, For details, please refer to the GPIO Alternative Signal Functions.
75	MCU_GPIO18	I/O	GPIOs, For details, please refer to the GPIO Alternative Signal Functions.
76	GND	P	Ground connections
77	GPADC_IN0	I	Analog input channel of the General-Purpose ADC. please refer to the GPIO Alternative Signal Functions.
78	GPADC_IN3	I	Analog input channel of the General-Purpose ADC. please refer to the GPIO Alternative Signal Functions.
79	GPADC_IN4	I	Analog input channel of the General-Purpose ADC. please refer to the GPIO Alternative Signal Functions.
80	GPADC_IN6	I	Analog input channel of the General-Purpose ADC. please refer to the GPIO Alternative Signal Functions.
81	AU_DAC_OUT	O	This pin is reserved. (Floating)
82	GND	P	Ground connections
83	GND	P	Ground connections
84	GND	P	Ground connections
85	GND	P	Ground connections
86	GND	P	Ground connections
87	GND	P	Ground connections
88	GND	P	Ground connections
89	GND	P	Ground connections
90	GND	P	Ground connections
91	GND	P	Ground connections
92	GND	P	Ground connections
93	GND	P	Ground connections
94	RF_SW_CTRL_0	I/O	GPIOs : MCU_GPIO_26, For details, please refer to the GPIO Alternative Signal Functions.
95	RF_SW_CTRL_4	I/O	GPIOs : MCU_GPIO_20, For details, please refer to the GPIO Alternative Signal Functions.
96	MCU_GPIO20/STRAP7 (DVT MODE)	I/O	GPIOs, For details, please refer to the GPIO Alternative Signal Functions. Refer to the Boot Option settings for details.
97	MCU_GPIO30/STRAP2(BOOT)	I/O	GPIOs, For details, please refer to the GPIO Alternative Signal Functions. Refer to the Boot Option settings for details.
98	MCU_GPIO31/STRAP1(BOOT)	I/O	GPIOs, For details, please refer to the

			GPIO Alternative Signal Functions. Refer to the Boot Option settings for details.
99	MCU_GPIO0	I/O	GPIOs, For details, please refer to the GPIO Alternative Signal Functions.
100	MCU_GPIO6	I/O	GPIOs, For details, please refer to the GPIO Alternative Signal Functions.
101	GND	P	Ground connections
102	MCU_GPIO8	I/O	GPIOs, For details, please refer to the GPIO Alternative Signal Functions.
103	MCU_GPIO9/XSPI_CS0	I/O	GPIOs, For details, please refer to the GPIO Alternative Signal Functions.
104	VDDIO_C	P	DC supply voltage for digital I/O, Refer to the 2.2.2 Recommended Operating Rating for details.
105	GND	P	Ground connections
106	GND	P	Ground connections
107	GND	P	Ground connections
108	GND	P	Ground connections
109	GND	P	Ground connections
110	GND	P	Ground connections
111	GND	P	Ground connections
112	GND	P	Ground connections
113	GND	P	Ground connections
114	GND	P	Ground connections
115	GND	P	Ground connections
116	GND	P	Ground connections

6. Dimensions

6.1 Module Physical Dimensions

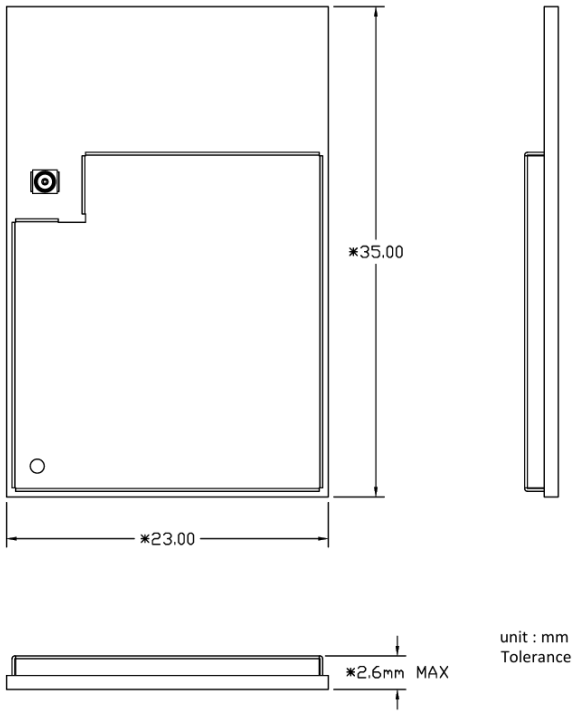

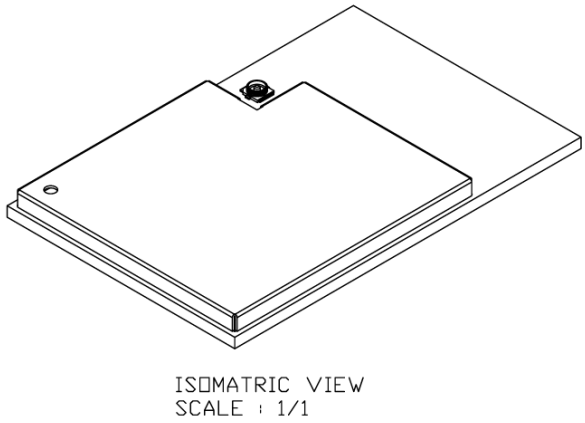

6.2 Recommended footprint

TBD

- Solder paste layer design is generally the same as recommended footprint.
  (錫膏層設計通常建議和焊墊尺寸相同)
- If soldering quality with good wetting on upright side is essential for PQC, how to optimize the aperture design in the stencil to adjust the amount of solder paste would be crucial.
  In addition, a kind of stencil design with stepped thickness in partial area would be considered if the thickness of stencil is about 0.1mm or thinner. Please optimize the stencil design by manufacture engineer or contact AMPAK FAE for assistance.
  (如果模組吃錫品質考量側面爬錫，如何優化鋼網開孔設計以調整適當的錫膏量是非常重要的。尤其鋼網的厚度大約是 0.1mm 或更薄時，可考慮局部加厚鋼網的設計。請諮詢製程工程師以優化鋼網的設計,或是聯絡正基科技技術支持團隊).

7. External clock reference

External 32.768 kHz Low-Power Oscillator

The AP72573 uses a secondary low-frequency clock for low-power mode timing. Either the internal low precision LPO or an external 32.768 kHz precision oscillator is required. The internal LPO frequency range is approximately 33 kHz (± 30%) over process, voltage, and temperature, which is adequate for some applications. However, one trade-off caused by this wide LPO tolerance is a small current consumption increase during power-save mode that is incurred by the need to wake up earlier to avoid missing beacons.

Whenever possible, the preferred approach is to use a precision external 32.768 kHz clock which meets the requirements listed in the following table.

External LPO signal characteristics

Parameter	Specification	Units
Nominal input frequency	32.768	kHz
Frequency accuracy	+/-200	ppm
Duty cycle	30 - 70	%
Input signal amplitude	1.8±0.09	V
Signal type	Square-wave or sine-wave	-
Input impedance	>100k <5	Ω pF
Clock jitter (integrated over 300Hz – 15KHz)	<1	Hz
Output high voltage	0.7Vio - Vio	V

8. Host Interface (TBD)

8.1 Reset and Regulator Control Signals Sequencing

Single control signals, CHIP_REG_ON is used to power-up the regulators and take the respective sections out of reset as per power-up sequence. All regulators are powered down only when control signals are de-asserted.

- CHIP_PAD_REG_ON: In stand-alone systems (no external host), the module operates as the host and can enter shutdown when not needed using CHIP_PAD_REG_ON. The device restores operation through the CHIP_PAD_REG_ON pin, which controls power-up and reactivation of internal circuitry. In systems with an external host, shutdown is initiated by the host while the module's I/O domain stays powered to avoid loading shared interfaces. In this mode, power-up remains controlled by the CHIP_PAD_REG_ON pin, while wake-up events are triggered by a host-provided GPIO, enabling precise host-managed power sequencing and minimizing system power consumption. When the module is powered on from this state, it is the same as a normal power-up and the device does not retain any information about its state from before it was powered down. The module integrate PMU has an under voltage lockout (ULVO). When it detects either VBAT < 2.23V or VDDIO < 1.52V, it will shut down the PMU (Module).

8.2 Start-Up Sequences

8.3 Power-Down Sequence

8.4 SDIO V3.0 Interface Description

8.5 GPIOs Interface Description

8.6 I2C Interface Description

8.7 UART Interface Description

8.8 SPI Interface Description

8.9 PDM Interface Description

8.10 PWM Interface Description

8.11 ADC / DAC Interface Description

9. NPU Description (TBD)

10. Boot Option (TBD)

11. GPIO Alternative Signal Functions (TBD)

12. Recommended Reflow Profile

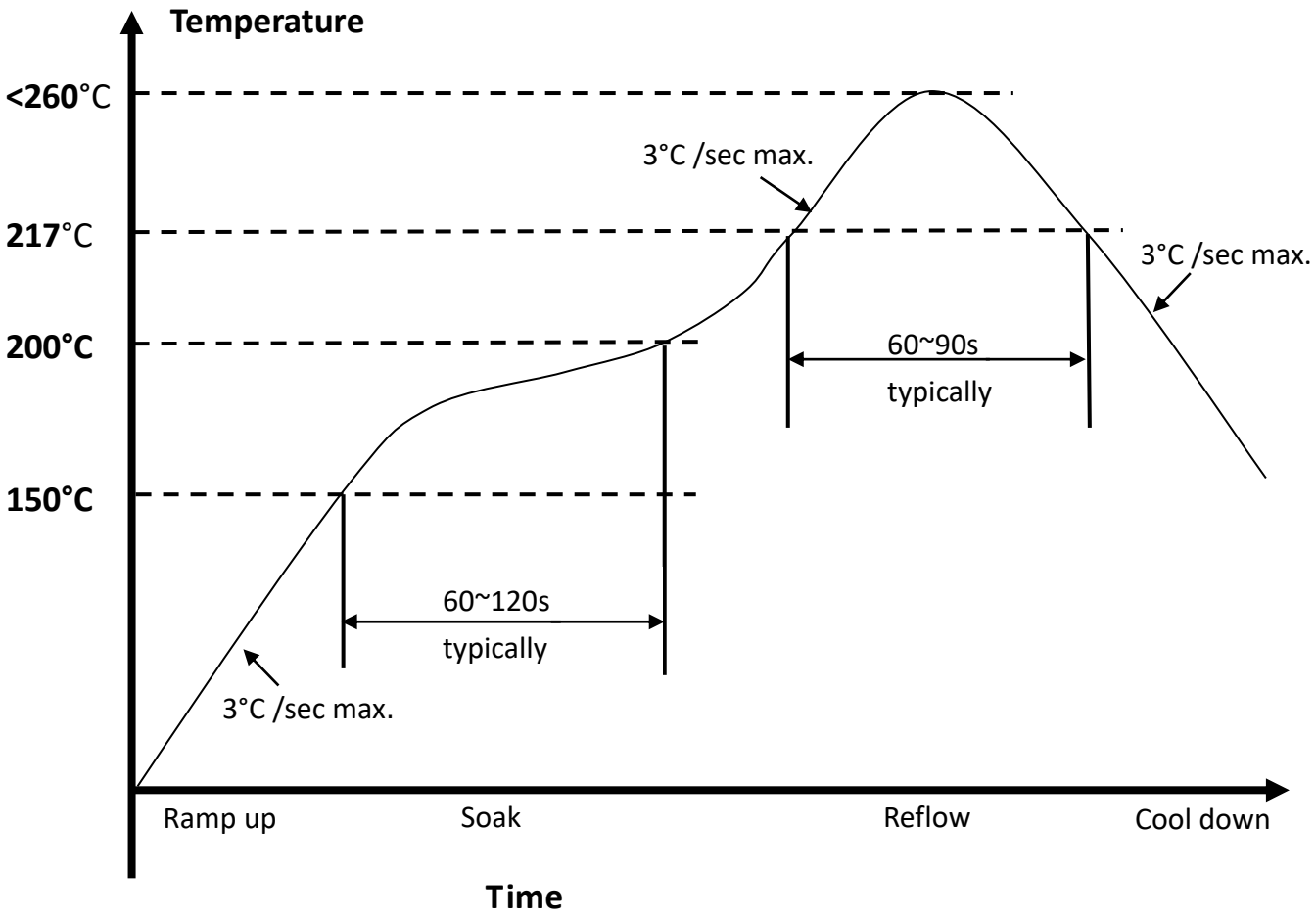

1. Referred to IPC/JEDEC standard
2. Peak Temperature : <260°C(Time within 5°C of actual Peak Temperature 20-40 seconds)
3. Cycle of Reflow : 2 times max.
4. Adding Nitrogen (N2) to implement 2000ppm or less of oxygen concentration during reflow process is recommended.
5. If the shelf time is exceeded, be sure baking step to remove the moisture from the component

13. Package Information (TBD)

Items	Photo	Description
1	Pin 1 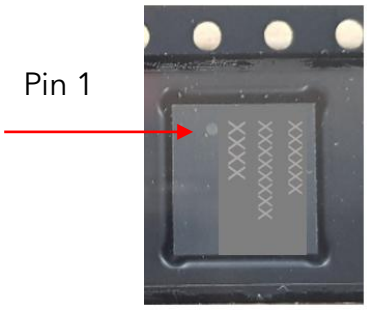	Pin 1 indicator in carrier tape
2	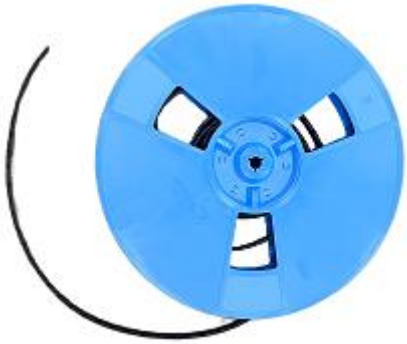	13" W24.0mm Reel
3		Humidity Indicator Card & Desiccant inside
4		MSL Caution label on top side of Al bag
5		Anti-static and humidity notice on top side of Al bag

6	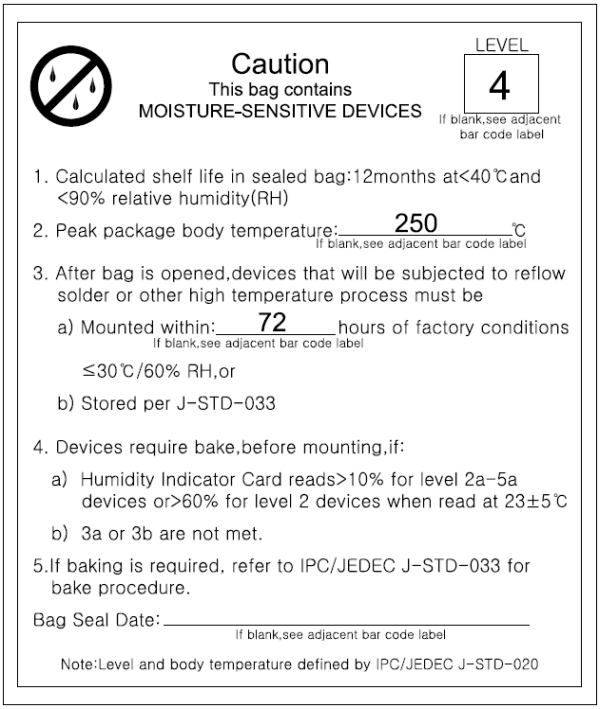	MSL Level / Storage Condition
7		1 reel per inner box (Box) Quantity:1500pcs/reel
8	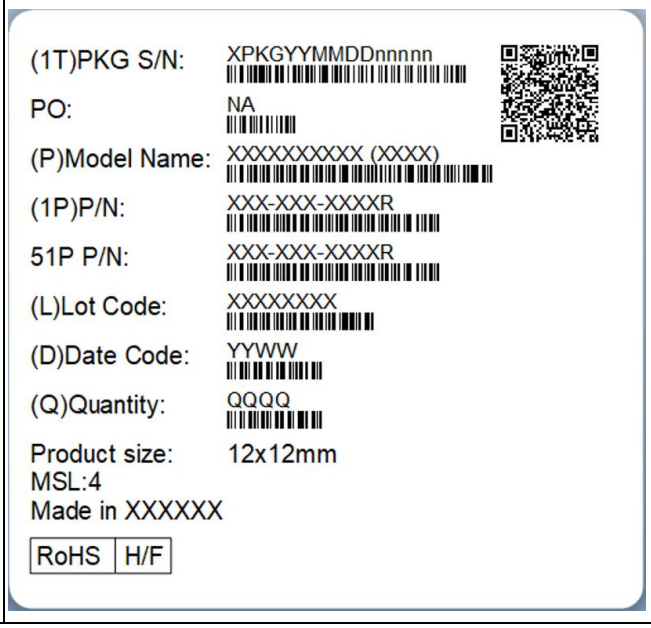	Inner box (Box) label (Reel label/Al Bag label/Box label) The label content includes barcode and QR CODE

9		5 inner boxes per outer box (Carton) Quantity: 7500pcs/outer box (Carton)
10		Outer box (Carton) Quantity: 7500pcs/outer box (Carton)
11	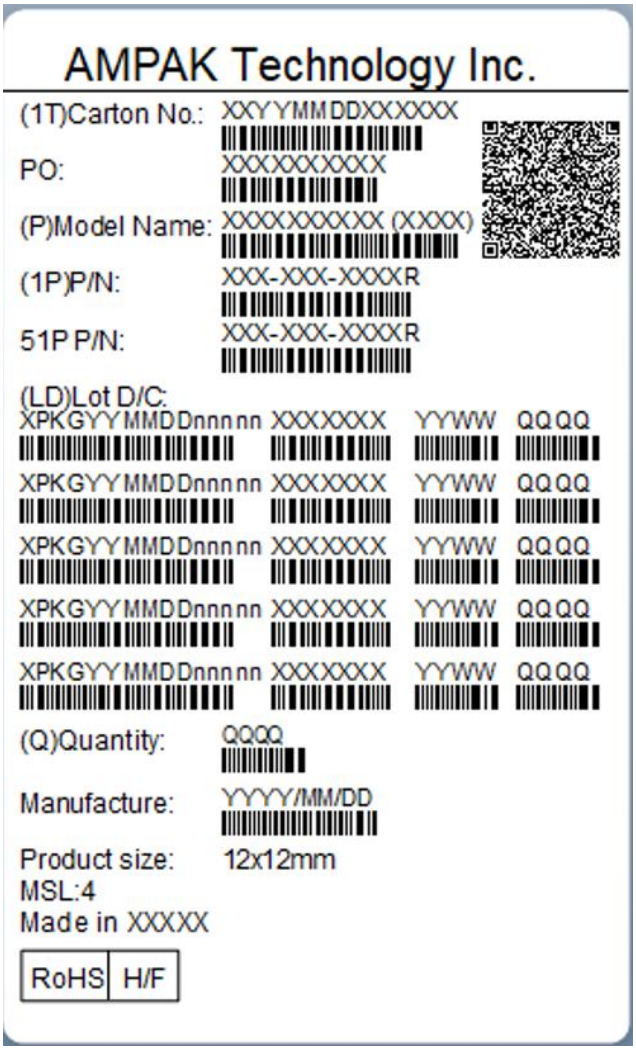	Outer box (Carton) label The label content includes barcode and QR CODE